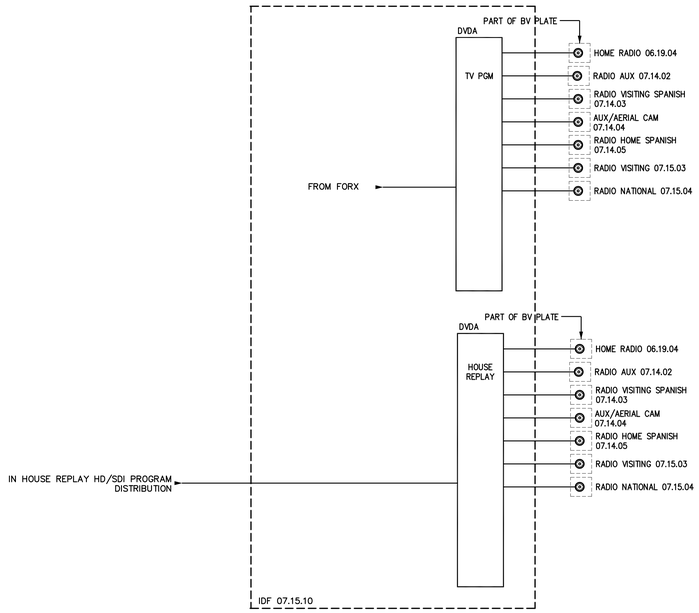

04 BROADCAST BOOTH VIDEO DISTRIBUTION

NOTES:
1. LOCATE FOT IN NETWORK HOUSE RACK.
2. LOCATE VIDEO DISTRIBUTION EQUIPMENT IN IDF RACK.

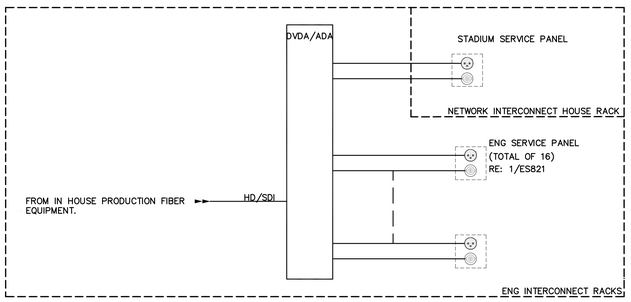

03 ENG VIDEO REPLAY DISTRIBUTION

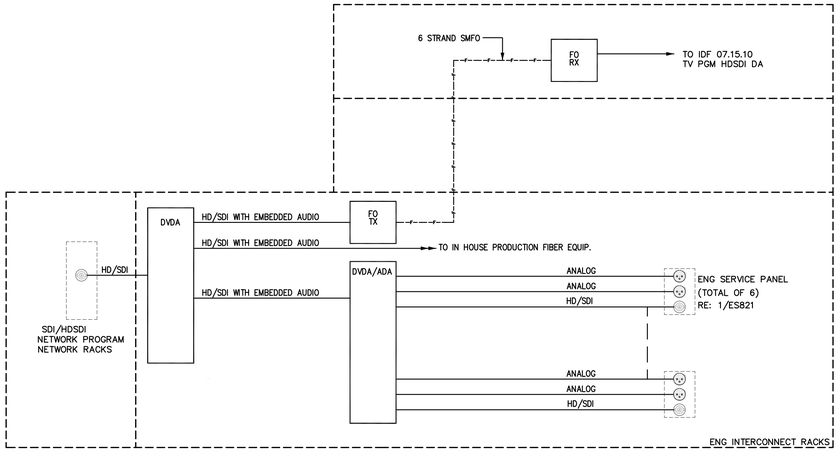

02 HD/SDI PROGRAM DISTRIBUTION

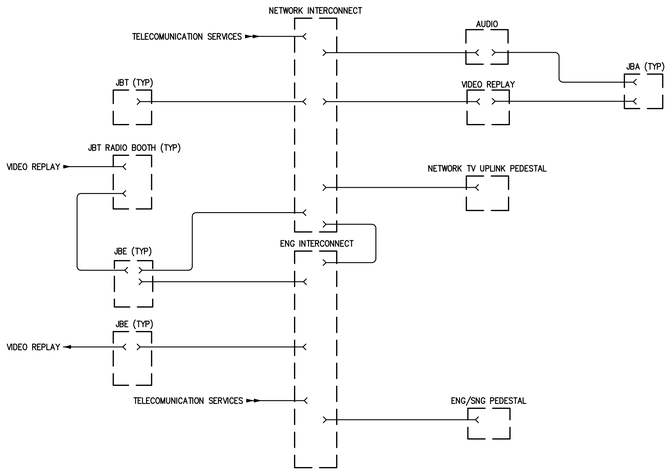

01 INTERCONNECT TOPOLOGY

BROADCAST NOTES:
1. DEVICE DESCRIPTIONS;
   JBT: JUNCTION BOX USED BY NETWORK BROADCASTERS.

   JBE: JUNCTION BOX USED BY LOCAL BROADCASTERS FOR ELECTRONIC NEWS GATHERING (ENG). CABLES TYPICALLY TERMINATE WITHIN ENG INTERCONNECT.

   JBE/T: JUNCTION BOX SHARED BY EVENT AND LOCAL BROADCASTERS.

   JBA/R: JUNCTION BOX USED BY IN HOUSE VIDEO AND AUDIO.
2. SATELLITE UPLINK USED BY NETWORK BROADCASTERS. LOCATED ON STREET OR IN PARKING LOT.
3. SATELLITE NEWS GATHERING (SNG) UPLINK USED BY LOCAL/REGIONAL BROADCASTERS. USUALLY LOCATED IN PROXIMITY OF EVENT SATELLITE UPLINK (SEE NOTE 2).
4. ENG PEDESTALS ARE USED BY LOCAL BROADCASTERS.
5. NETWORK INTERCONNECT RACKS AND ENG INTERCONNECT RACKS ARE LOCATED IN BROADCAST AND ENG ROOMS ADJACENT TO TV TRUCK PARKING.
6. MICROWAVE TRANSMITTER ROOM USED BY LOCAL BROADCASTERS FOR PERMANENT MICROWAVE COMMUNICATIONS TO THEIR STUDIO.

HKS

OWNER
MINNESOTA SPORTS FACILITIES AUTHORITY
900 SOUTH 5th STREET, MINNEAPOLIS, MN 55415

OWNER
MINNESOTA VIKINGS FOOTBALL, LLC
9500 VIKING DR., EDEN PRAIRIE, MN 55344

ARCHITECT / INTERIORS / BRANDING
HKS, INC.
1919 McKINNEY AVENUE, DALLAS, TX 75201

ASSOCIATE ARCHITECT - SKIN
STUDIO FIVE ARCHITECTS
322 FIRST AVE. N, SUITE 600, MINNEAPOLIS, MN 55401

MEP / TECHNOLOGY
M-E ENGINEERS, INC.
10055 WEST 43rd AVE., WHEAT RIDGE, CO 80033

STRUCTURAL ENGINEER
THORNTON TOMASETTI
12750 MERIT DR., SUITE 750, LB-7, DALLAS, TX 75251

CIVIL ENGINEER
EVS, INC.
10250 VALLEY VIEW, SUITE 123, EDEN PRAIRIE, MN 55344

LANDSCAPE ARCHITECT
OSLUND AND ASSOCIATES
115 WASHINGTON AVE. N., MINNEAPOLIS, MN 55401

AUDIO VISUAL CONSULTANTS
ACOUSTIC DIMENSIONS
15508 WRIGHT BROTHERS DR., ADDISON, TX 75001

WJHW
4801 SPRING VALLEY RD., DALLAS, TX 75244

CODE / FIRE PROTECTION
FSC, INC.
9225 INDIAN CREEK, SUITE 300, OVERLAND PK, KS 66210

FOOD SERVICE
RICCA NEWMARK
5325 SOUTH VALENTIA, GREENWOOD VLG, CO 80111

LIGHTING CONSULTANT
PH DC
1425 DUTCH VALLEY PL., C & D, ATLANTA, GA 30324

WAYFINDING
SELBERT PERKINS DESIGN
432 CULVER BLVD., PLAYA DEL REY, CA 90293

VERTICAL TRANSPORTATION
ELEVATOR ADVISORY GROUP
14530 PENNOCK AVE., SAINT PAUL, MN 55124

ADA CONSULTANT
ED ROETHER CONSULTING, LLC.
25950 MISSION BELLEVIEW, LOUISBURG, KS 66053

WIND / SNOW CONSULTANT
ROWAN, WILLIAMS, DAVIES, AND IRWIN, INC
650 WOODLAWN RD. W., GUELPH, ON CANADA N1K 1B8

BUILDING ENVELOPE CONSULTANT
THORNTON TOMASETTI - BUILDING SKIN PRACTICE
330 N. WABASH AVE., SUITE 1500, CHICAGO, IL 60611

FACADE ACCESS CONSULTANT
LERCH BATES, INC.
8089 LINCOLN ST., SUITE 105, LITTLETON, CO 80122

Minnesota MULTI-PURPOSE STADIUM

KEY PLAN

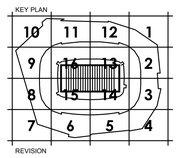

REVISION

HKS PROJECT NUMBER
16246.000

DATE
MAY 2, 2014

ISSUE
CCD-060

SHEET TITLE
BROADCAST DISTRIBUTION DETAILS

SHEET NO.
ES8.05

© 2013 HKS, INC.

TEMPLATE VERSION:

PLOT DATE: