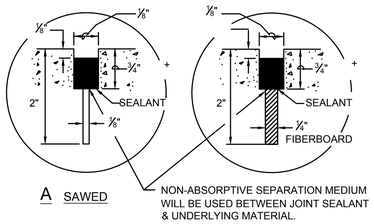

A SAWED

B FIBERBOARD FILLER

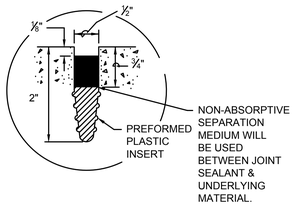

C PREFORMED PLASTIC INSERT

NOTE: ONLY SAWN CONTRACTION JOINTS SHALL BE USED IF SLIPFORM METHOD OF PLACEMENT IS CHOSEN. WHEN ALLOWED, LONGITUDINAL CONTRACTION JOINTS SHALL BE SAWN ONLY.

1 / C9.28 CONCRETE CONTRACTION JOINTS POURED-IN-PLACE JOINT SEALANT NOT TO SCALE

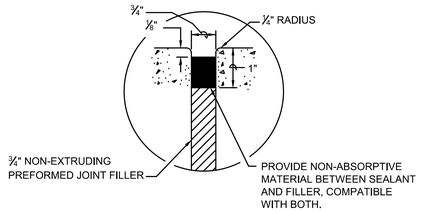

2 / C9.28 CONCRETE EXPANSION JOINTS POURED-IN-PLACE JOINT SEALANT NOT TO SCALE

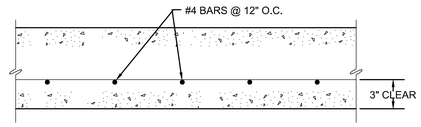

6 / C9.28 SLAB REINFORCEMENT DETAIL NOT TO SCALE

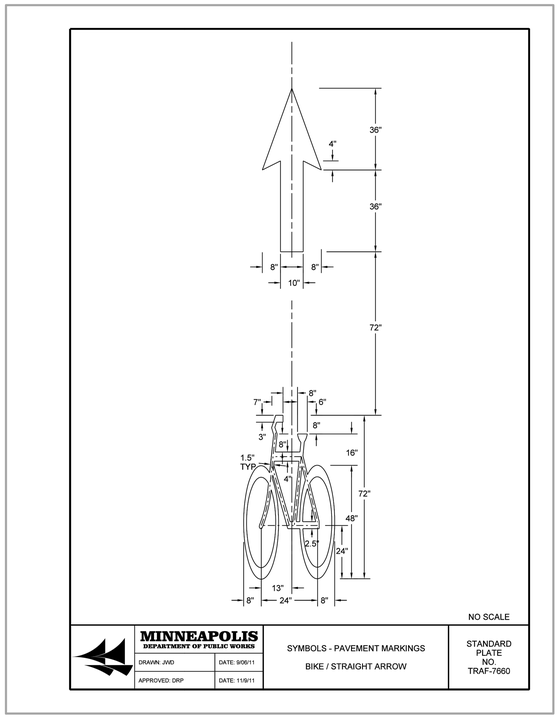

3 / C9.28 PAVEMENT MARKINGS BIKE/STRAIGHT ARROW NOT TO SCALE

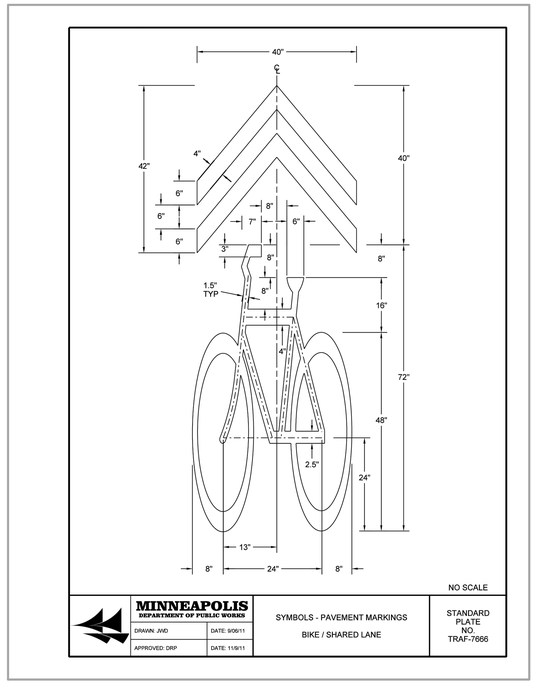

4 / C9.28 PAVEMENT MARKINGS BIKE/SHARED LANE NOT TO SCALE

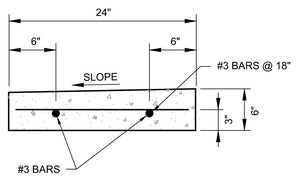

NOTES:

1. PROVIDE CONTRACTION JOINTS SPACED @ 10' MIN. PER DETAIL 7/C9.27 (EXTEND REINFORCING THROUGH JOINT)
2. PROVIDE DOWELED EXPANSION JOINTS SPACED @ 60' MIN. INSTALL DOWEL AS SHOWN ON DETAIL 7/C9.27. INSTALL EXPANSION JOINT FILLER AND SEALANT FULL DEPTH OF GUTTER AS SHOWN ON DETAIL 8/C9.27.

5 / C9.28 RIBBON GUTTER DETAIL NOT TO SCALE

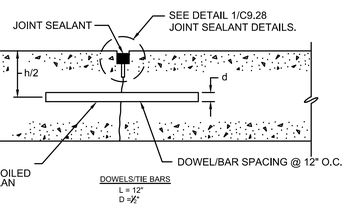

NOTE:
OMIT DOWELS/BARS AT CONTRACTION JOINTS.

8 / C9.28 CONCRETE PAVEMENT CONSTRUCTION AND CONTRACTION JOINTS NOT TO SCALE

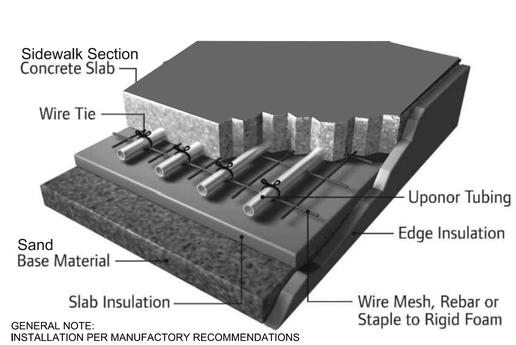

GENERAL NOTE:
INSTALLATION PER MANUFACTORY RECOMMENDATIONS

10 / C9.28 SNOW MELT SYSTEM - CONCRETE SIDEWALK NOT TO SCALE

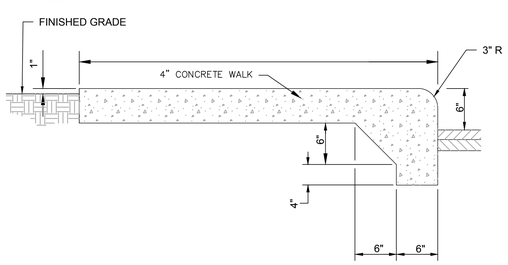

NOTE: PROVIDE CONTR. JT. SPACING @ NO GREATER THAN WIDTH OF SIDEWALK. INSTALL EXP. JT. @ MIN. 20' SPACING.

SEE 1/C9.28 FOR CONTR. JT., SEE 2/C9.28 FOR EXP. JT.

7 / C9.28 INTEGRAL CURB & WALK NOT TO SCALE

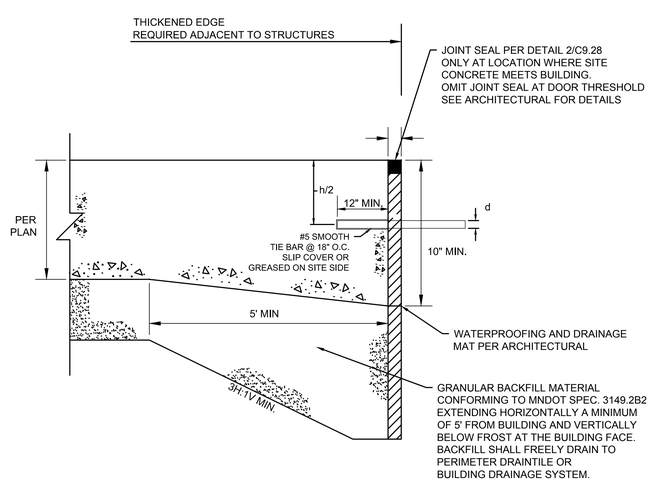

9 / C9.28 CONCRETE THICKENED-EDGE AT BUILDING INTERFACE NOT TO SCALE

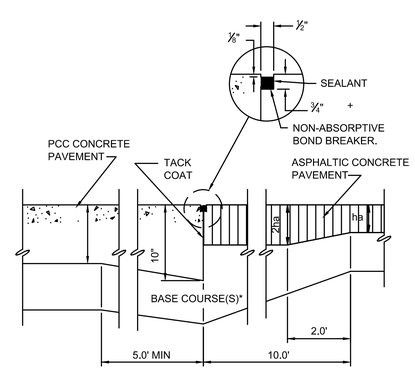

* SEE PAVEMENT SECTION FOR THICKNESS OF BASE COURSE

10 / C9.28 CONSTRUCTION JOINT ASPHALT CONCRETE TO PCC CONCRETE NOT TO SCALE

© 2013 HKS, INC.

HKS

OWNER
MINNESOTA SPORTS FACILITIES AUTHORITY
900 SOUTH 5th STREET, MINNEAPOLIS, MN 55415

OWNER
MINNESOTA VIKINGS FOOTBALL, LLC
9500 VIKING DR., EDEN PRAIRIE, MN 55344

ARCHITECT
HKS, INC.
350 N. ST. PAUL ST., SUITE 100, DALLAS, TX 75201

CIVIL ENGINEER
EVS, INC.
10025 VALLEY VIEW, SUITE 140, EDEN PRAIRIE, MN 55344

LANDSCAPE ARCHITECT
OSLUND AND ASSOCIATES
115 WASHINGTON AVE. N., MINNEAPOLIS, MN 55401

STRUCTURAL ENGINEER
SEH INC.
10901 RED CIRCLE DR, STE 300 MINNETONKA, MN 55343

ELECTRICAL ENGINEER
SEH INC.
10901 RED CIRCLE DR, STE 300 MINNETONKA, MN 55343

AUDIO VISUAL CONSULTANTS
WJHW
4801 SPRING VALLEY RD., DALLAS, TX 75244

WAYFINDING
SELBERT PERKINS DESIGN
432 CULVER BLVD., PLAYA DEL REY, CA 90293

Minnesota MULTI-PURPOSE STADIUM

CERTIFICATION
I hereby certify that the plan, specification, or report was prepared by me or under my direct supervision and that I am a duly Licensed Professional Engineer under the laws of the State of Minnesota.
Name: Daniel E Bowar
Reg. No.: 45018
Date: 02/01/2016
Signature:

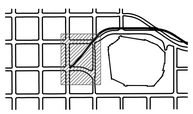

REVISION

NO.	DESCRIPTION	DATE

HKS PROJECT NUMBER
16246.000

DATE
FEBRUARY 01, 2016

ISSUE
CCD-347 - CD SET

SHEET TITLE
SITE PAVING DETAILS

SHEET NO.
C9.28

PLOT DATE: 1/15/2015 3:26:54 PM

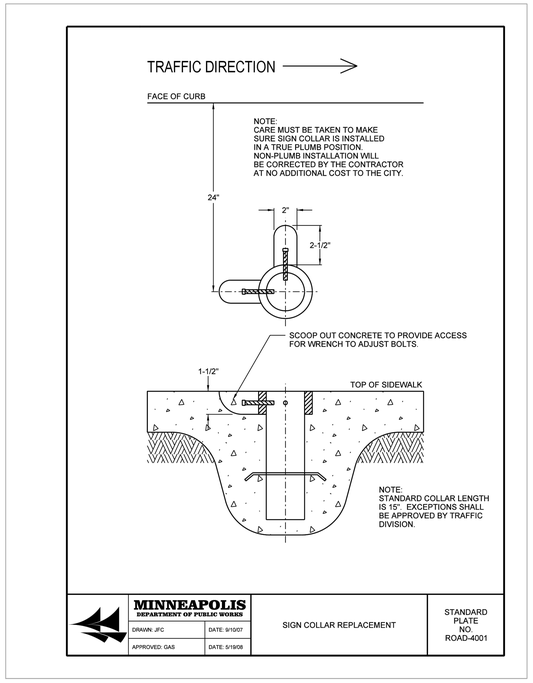

1 C9.29 SIGN COLLAR REPLACEMENT

NOT TO SCALE

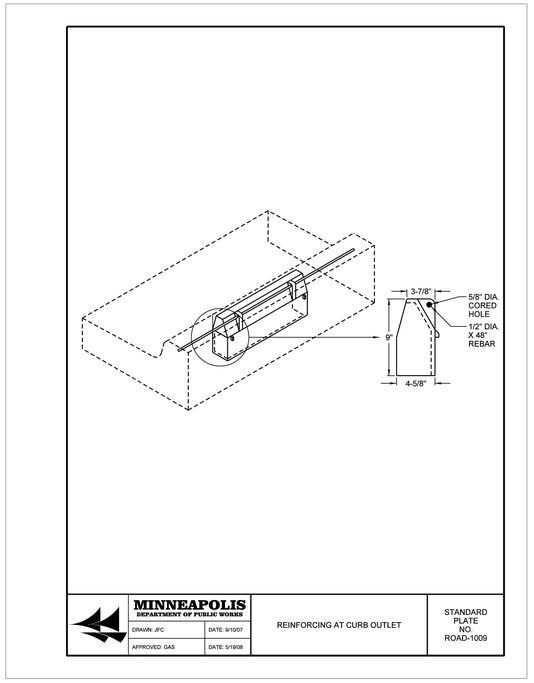

2 C9.29 REINFORCING AT CURB OUTLET

NOT TO SCALE

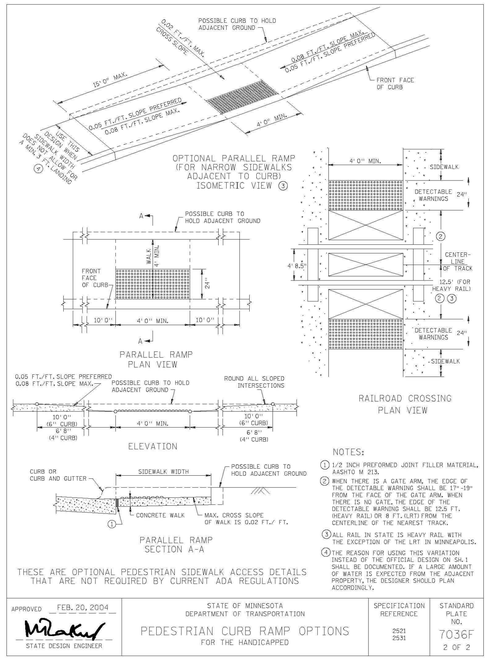

3 C9.29 PEDESTRIAN CURB RAMP

NOT TO SCALE

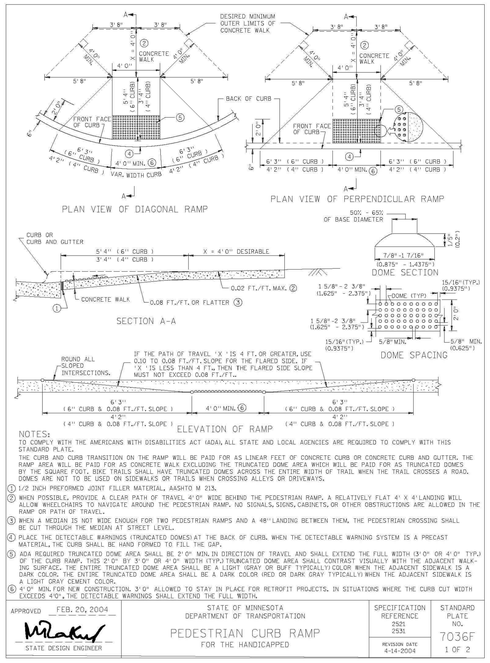

4 C9.29 PEDESTRIAN CURB RAMP

NOT TO SCALE

5 C9.29 NOT USED

NOT TO SCALE

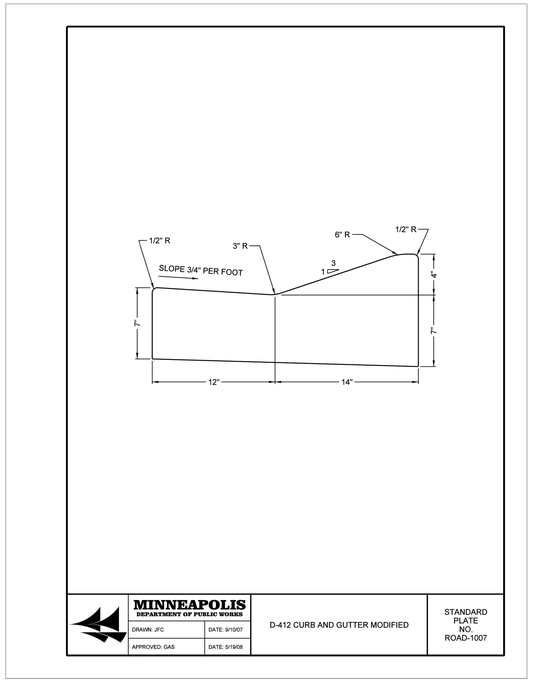

6 C9.29 D-412 CURB AND GUTTER

NOT TO SCALE

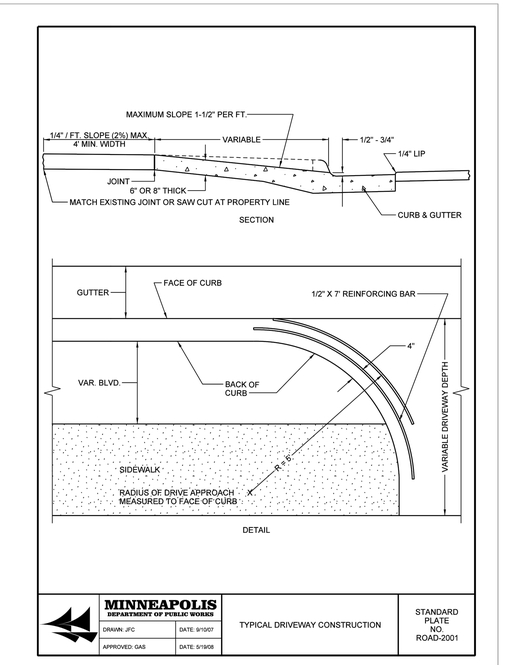

7 C9.29 TYPICAL DRIVEWAY CONSTRUCTION

NOT TO SCALE

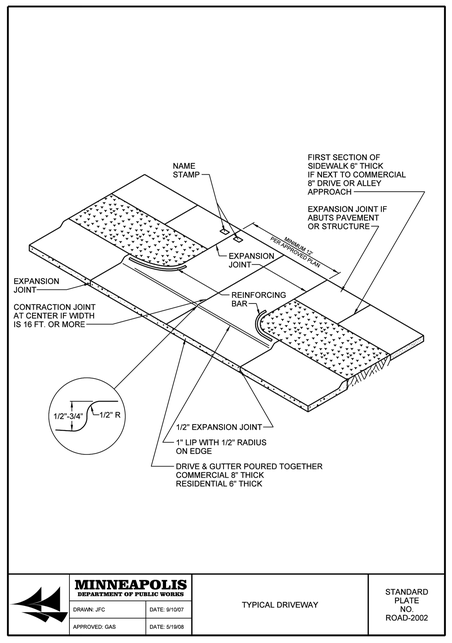

8 C9.29 TYPICAL DRIVEWAY

NOT TO SCALE

HKS

OWNER
MINNESOTA SPORTS FACILITIES AUTHORITY
900 SOUTH 5th STREET, MINNEAPOLIS, MN 55415

OWNER
MINNESOTA VIKINGS FOOTBALL, LLC
9500 VIKING DR., EDEN PRAIRIE, MN 55344

ARCHITECT
HKS, INC.
350 N. ST. PAUL ST., SUITE 100, DALLAS, TX 75201

CIVIL ENGINEER
EVS, INC.
10025 VALLEY VIEW, SUITE 140, EDEN PRAIRIE, MN 55344

LANDSCAPE ARCHITECT
OSLUND AND ASSOCIATES
115 WASHINGTON AVE. N., MINNEAPOLIS, MN 55401

STRUCTURAL ENGINEER
SEH INC.
10901 RED CIRCLE DR, STE 300 MINNETONKA, MN 55343

ELECTRICAL ENGINEER
SEH INC.
10901 RED CIRCLE DR, STE 300 MINNETONKA, MN 55343

AUDIO VISUAL CONSULTANTS
WJHW
4801 SPRING VALLEY RD., DALLAS, TX 75244

WAYFINDING
SELBERT PERKINS DESIGN
432 CULVER BLVD., PLAYA DEL REY, CA 90293

MINNESOTA MULTI-PURPOSE STADIUM

CERTIFICATION
I hereby certify that the plan, specification, or report was prepared by me or under my direct supervision and that I am a duly Licensed Professional Engineer under the laws of the State of Minnesota.
Name: Daniel E Bowar
Reg. No.: 45018
Date: 02/01/2016
Signature:

REVISION
NO. DESCRIPTION DATE

HKS PROJECT NUMBER
16246.000

DATE
FEBRUARY 01, 2016

ISSUE
CCD-347 - CD SET

SHEET TITLE
SITE PAVING DETAILS

SHEET NO.
C9.29

© 2013 HKS, INC.

PLOT DATE: 1/15/2015 3:26:54 PM

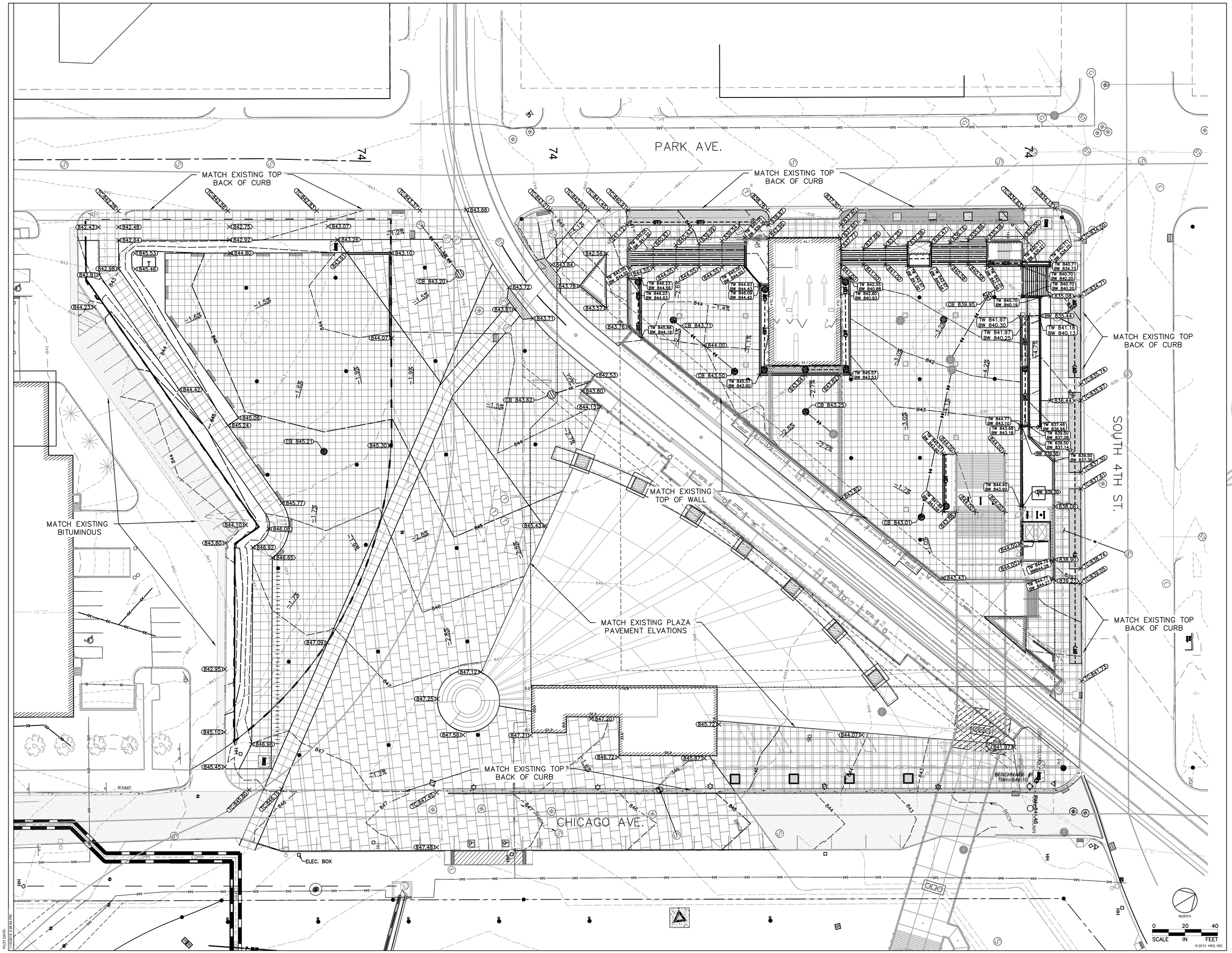

© 2013 HKS, INC.

PLOT DATE:
1/15/2015 3:28:54 PM

HKS

OWNER
MINNESOTA SPORTS FACILITIES AUTHORITY
900 SOUTH 5th STREET, MINNEAPOLIS, MN 55415

OWNER
MINNESOTA VIKINGS FOOTBALL, LLC
9500 VIKING DR., EDEN PRAIRIE, MN 55344

ARCHITECT
HKS, INC.
350 N. ST. PAUL ST., SUITE 100, DALLAS, TX 75201

CIVIL ENGINEER
EVS, INC.
10025 VALLEY VIEW, SUITE 140, EDEN PRAIRIE, MN 55344

LANDSCAPE ARCHITECT
OSLUND AND ASSOCIATES
115 WASHINGTON AVE. N., MINNEAPOLIS, MN 55401

STRUCTURAL ENGINEER
SEH INC.
10901 RED CIRCLE DR, STE 300 MINNETONKA, MN 55343

ELECTRICAL ENGINEER
SEH INC.
10901 RED CIRCLE DR, STE 300 MINNETONKA, MN 55343

AUDIO VISUAL CONSULTANTS
WJHW
4801 SPRING VALLEY RD., DALLAS, TX 75244

WAYFINDING
SELBERT PERKINS DESIGN
432 CULVER BLVD., PLAYA DEL REY, CA 90293

CIVIL ENGINEERING SUBCONSULTANT
COMPANY NAME, INC.
COMPANY ADDRESS

Minnesota
MULTI PURPOSE STADIUM

CERTIFICATION

I hereby certify that the plan, specification, or report was prepared by me or under my direct supervision and that I am a duly Licensed Professional Engineer under the laws of the State of Minnesota.

Name: Eric T. Luth
Reg. No.: 50475
Date: 02/01/2016
Signature:

REVISION

NO.	DESCRIPTION	DATE

HKS PROJECT NUMBER
16246.000

DATE
FEBRUARY 01, 2016

ISSUE
CCD-347 - CD SET

SHEET TITLE
GRADING PLAN

SHEET NO.
C9.35

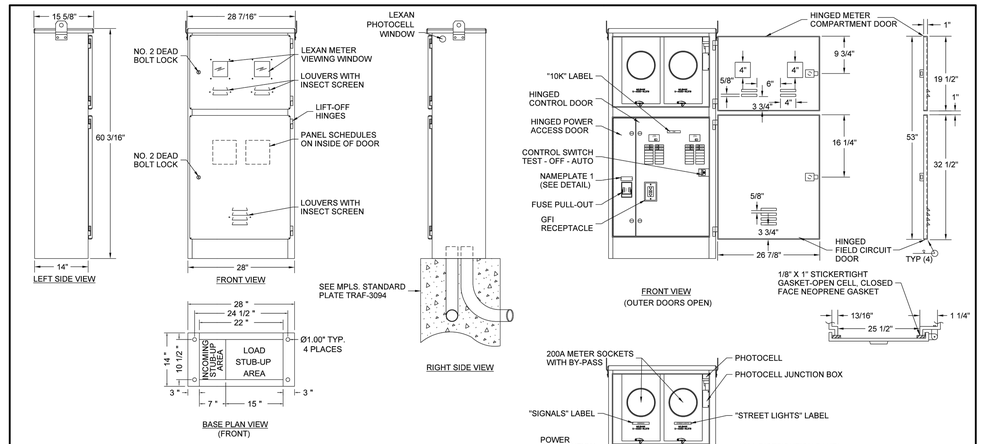

1. ALL HINGES SHALL BE LIFTOFF SOUTHCO MODEL 96-10-500-50.
2. DOORS SHALL BE PROVIDED WITH NEOPRENE GASKET TO FORM A COMPLETE SEAL WITH THE ENCLOSURE.
3. FEED POINT PEDESTAL CABINET SHALL BE NEMA 3R ENCLOSURE, U.L. LISTED AND LABELED "SUITABLE FOR USED AS SERVICE ENTRANCE EQUIPMENT."
4. FEED POINT PEDESTAL CABINET MATERIAL SHALL BE 3/16" 5052-O ALUMINUM.
5. UTILITY APPROVED METER SOCKET WITH DISCONNECT.
6. THE METER COMPARTMENT DOOR AND THE CIRCUIT BREAKER COMPARTMENT DOOR SHALL BE SECURED WITH A STANDARD CITY OF MPLS. LOCK AND BE EQUIPPED WITH A SWING DOWN PLATE WITH TWO KEYS.
7. LOCKS TO BE FURNISHED & INSTALLED BY VENDOR.
8. ALL ATTACHMENTS TO CABINET SHALL BE WELDED OR USE STAINLESS STEEL STANDOFFS.
9. LOUVERS SHALL BE BACKED WITH PERFORATED (1/8" HOLE) STAINLESS STEEL SHEET.
10. WINDOWS SHALL BE CENTERED IN UPPER COMPARTMENT ON METER SOCKETS.
11. EQUIPMENT SHALL BE ARRANGED WITHIN CABINET AS APPROXIMATELY SHOWN.
12. PANELBOARD DEAD FRONTS SHALL BE PUNCHED TO MATCH FULL CAPACITY OF BREAKER PANEL.

MINNEAPOLIS DEPARTMENT OF PUBLIC WORKS		CABINET - ST. LIGHT / SIGNAL SERVICE REFERENCE PLATE: TRAF-3094, TRAF-3631	STANDARD PLATE NO. TRAF-3500
DRAWN: CLK	DATE: 12/15/15		
APPROVED: DRP	DATE: 12/15/15		

1 / C9.40 CABINET - ST. LIGHT / SIGNAL SERVICE

NOT TO SCALE

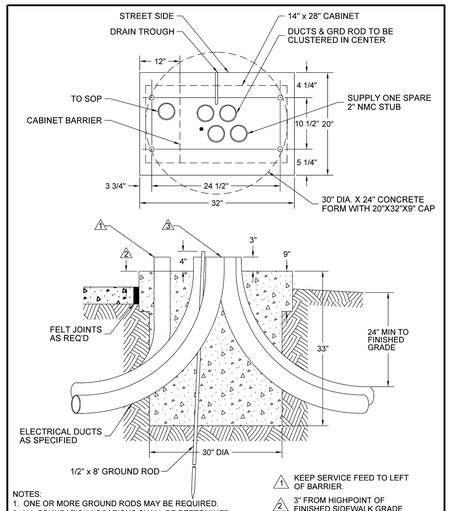

NOTES:
1. ONE OR MORE GROUND RODS MAY BE REQUIRED.
2. ALL FOUNDATION LOCATIONS SHALL BE DETERMINED IN FIELD BY TRAFFIC DIVISION AT TIME OF CONSTRUCTION.
3. FOUNDATION TOP SHALL HAVE SQUARE EDGES AND BE FINISHED ON ALL SIDES.
4. CABINET ANCHORS ARE WEDGE ANCHORS, 4 PER CABINET, 1/2" X 4 1/2" STAINLESS STEEL (#304) FULL THREADED.

1. KEEP SERVICE FEED TO LEFT OF BARRIER.
2. 3" FROM HIGHPOINT OF FINISHED SIDEWALK GRADE, 4" FROM HIGHPOINT OF FINISHED BOULEVARD GRADE.
3. PROVIDE PROTECTIVE BUSHINGS ON ALL CONDUITS.

NO SCALE

MINNEAPOLIS DEPARTMENT OF PUBLIC WORKS		FOUNDATION - ST. LIGHT/SIGNAL SERVICE CABINET	STANDARD PLATE NO. TRAF-3094-R2
DRAWN: CLK	DATE: 1/4/16		
APPROVED: DRP	DATE: 1/4/16		

2 / C9.40 CABINET - ST. LIGHT / SIGNAL SERVICE CABINET

NOT TO SCALE

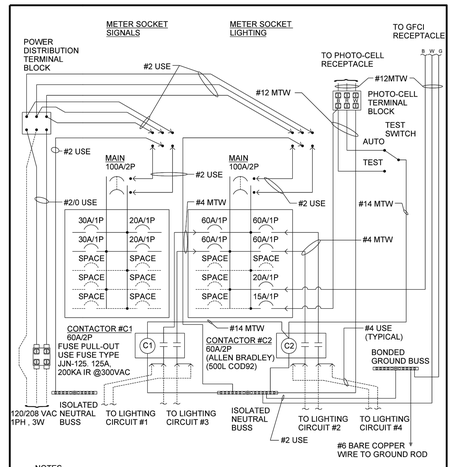

NOTES
1. TYPICAL INSTALLATION SHOWN, COMPONENT SIZE MAY VARY.
2. KEEP C1 COMPONENTS ON LEFT AND C2 COMPONENTS ON RIGHT.
3. LOAD CENTER AND BREAKERS SHALL BE SQUARE D.
4. COMPONENT PARTS IDENTIFIED ARE CITY OF MPLS. STANDARD.
5. CONTACTORS SHALL BE DOUBLE LUGGED AND ACCOMMODATE #4 UP TO #1/0 WIRE SIZE.
6. WIRE DESIGNATION: MTW= MACHINE TOOL WIRE; USE= RHW-2/USE-2
7. TEST SWITCH AND PHOTO-CELL SOCKET SHALL BE BRACKET MOUNTED.
8. SEE MPLS. STD. PLATE TRAF-3500 FOR CABINET LAYOUT.
9. ALL TERMINAL BLOCKS SHALL BE INSTALLED IN LOWER HALF OF ENCLOSURE.
10. NEUTRAL AND EQUIPMENT BUSSES SHALL BE BONDED AND ACCOMMODATE #4 UP TO #1/0 WIRE SIZE.

NO SCALE

MINNEAPOLIS DEPARTMENT OF PUBLIC WORKS		WIRING - ST. LIGHT/SIGNAL SERVICE CABINET REFERENCE PLATE: TRAF-3500	STANDARD PLATE NO. TRAF-3631-R3
DRAWN: CLK	DATE: 1/4/16		
APPROVED: DRP	DATE: 1/4/16		

3 / C9.40 CABINET - ST. LIGHT / SIGNAL SERVICE CABINET

NOT TO SCALE

HKS

OWNER
MINNESOTA SPORTS FACILITIES AUTHORITY
900 SOUTH 5th STREET, MINNEAPOLIS, MN 55415

OWNER
MINNESOTA VIKINGS FOOTBALL, LLC
9500 VIKING DR., EDEN PRAIRIE, MN 55344

ARCHITECT
HKS, INC.
350 N. ST. PAUL ST., SUITE 100, DALLAS, TX 75201

CIVIL ENGINEER
EVS, INC.
10025 VALLEY VIEW, SUITE 140, EDEN PRAIRIE, MN 55344

LANDSCAPE ARCHITECT
OSLUND AND ASSOCIATES
115 WASHINGTON AVE. N., MINNEAPOLIS, MN 55401

STRUCTURAL ENGINEER
SEH INC.
10901 RED CIRCLE DR, STE 300 MINNETONKA, MN 55343

ELECTRICAL ENGINEER
SEH INC.
10901 RED CIRCLE DR, STE 300 MINNETONKA, MN 55343

AUDIO VISUAL CONSULTANTS
WJHW
4801 SPRING VALLEY RD., DALLAS, TX 75244

WAYFINDING
SELBERT PERKINS DESIGN
432 CULVER BLVD., PLAYA DEL REY, CA 90293

CIVIL ENGINEERING SUBCONSULTANT
HZ UNITED, LLC
3025 HARBOR LANE, SUITE 121, PLYMOUTH, MN 55447

Minnesota MULTI PURPOSE STADIUM

CERTIFICATION
I hereby certify that the plan, specification, or report was prepared by me or under my direct supervision and that I am a duly Licensed Professional Engineer under the laws of the State of Minnesota.
Name: Paul J Zager
Reg. No.: 41642
Date: 2/01/2016
Signature:

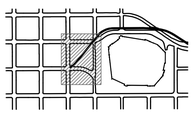

REVISION

NO.	DESCRIPTION	DATE

HKS PROJECT NUMBER
16246.000

DATE
FEBRUARY 01, 2016

ISSUE
CCD-347 - CD SET

SHEET TITLE
PLAZA LIGHTING DETAILS

SHEET NO.
C9.40

© 2013 HKS, INC.

PLOT DATE: 1/15/2015 3:26:54 PM

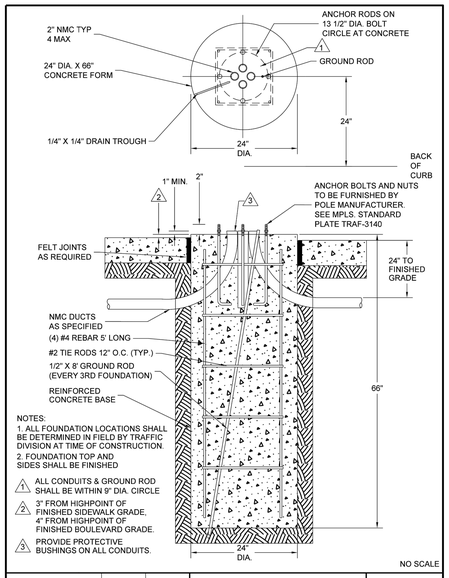

NOTES:
1. ALL FOUNDATION LOCATIONS SHALL BE DETERMINED IN FIELD BY TRAFFIC DIVISION AT TIME OF CONSTRUCTION.
2. FOUNDATION TOP AND SIDES SHALL BE FINISHED

1. ALL CONDUITS & GROUND ROD SHALL BE WITHIN 9" DIA. CIRCLE
2. 3" FROM HIGHPOINT OF FINISHED SIDEWALK GRADE, 4" FROM HIGHPOINT OF FINISHED BOULEVARD GRADE.
3. PROVIDE PROTECTIVE BUSHINGS ON ALL CONDUITS.

NO SCALE

Minneapolis Public Works	DRW: CLK	DATE: 5/5/15	FOUNDATION - ST. LIGHT 12'-15' - ROUND CAP REFERENCE PLATE: TRAF-3140	STANDARD PLATE NO. TRAF-3060-R2
	APP: DRP	DATE: 5/5/15		

1 C9.41 FOUNDATION - ST. LIGHT 12' - 15' - ROUND CAP NOT TO SCALE

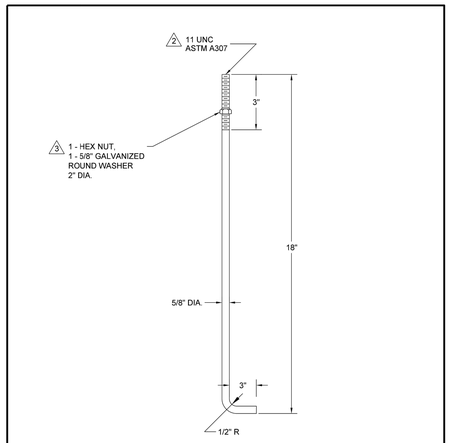

NOTES:
1. MATERIAL - STEEL, ASTM F1554 GR 55 (5/8" DIA. X 21" LONG BEFORE BENDING).
2. FINISH - HOT DIP GALVANIZED PER ASTM A153, FULL LENGTH. NUTS SHALL RUN FREE AFTER PLATING.
3. RODS SHALL BE SUPPLIED WITH GALVANIZED HEAVY HEX NUT, ASTM A563, PLUS GALVANIZED WASHER ASTM F436; ASSEMBLED AFTER ROD PLATING.

NO SCALE

MINNEAPOLIS DEPARTMENT OF PUBLIC WORKS	DRAWN: LPK	DATE: 1/1/11	ANCHOR ROD - ST. LIGHT 5/8" X 18"	STANDARD PLATE NO. TRAF-3140-R1
	APPROVED: DRP	DATE: 1/1/11		

2 C9.41 ANCHOR ROD - ST. LIGHT 5/8" X 18" NOT TO SCALE

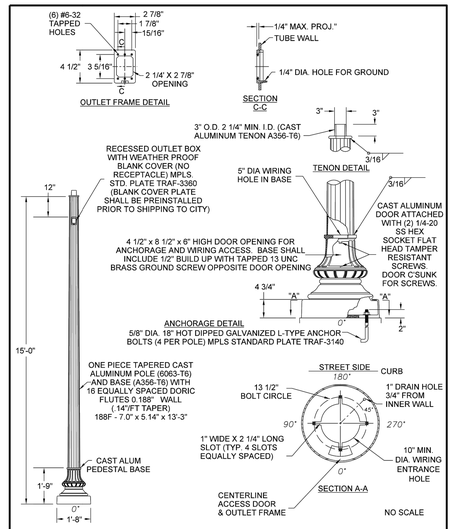

NOTES:
1. FOR FOUNDATION SEE MPLS STANDARD PLATE TRAF-3060
2. MATERIAL - CAST ALUMINUM SEE SPECIAL PROVISIONS
3. POLE & BASE FINISH SEE SPECIAL PROVISIONS

MINNEAPOLIS DEPARTMENT OF PUBLIC WORKS	DRAWN: CLK	DATE: 3/13/14	STANDARD - ST. LIGHT M-15' ALUMINUM ANODIZED W/RECEPTACLE REFERENCE PLATES: TRAF-3060, TRAF-3140, TRAF-3360	STANDARD PLATE NO. TRAF-3279-R2
	APPROVED: DRP	DATE: 3/13/14		

3 C9.41 STANDARD - ST. LIGHT M-15' ALUMINUM ANODIZED W/RECEPTACLE NOT TO SCALE

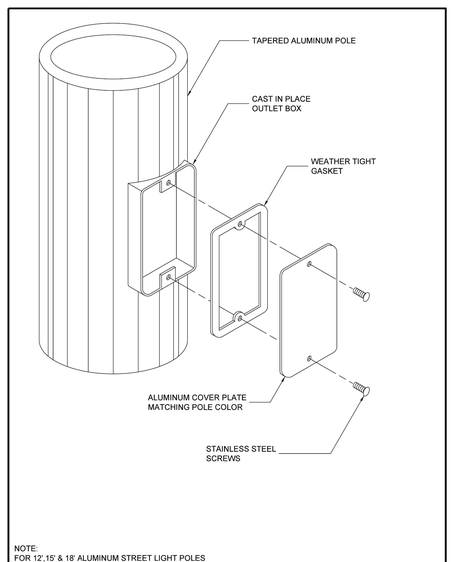

NOTE:
FOR 12',15' & 18' ALUMINUM STREET LIGHT POLES
COVER PLATE SHALL BE PREINSTALLED PRIOR TO SHIPPING TO CITY

NO SCALE

MINNEAPOLIS DEPARTMENT OF PUBLIC WORKS	DRAWN: CLK	DATE: 11/18/13	ATTACHMENT - ST. LIGHT RECESSED OUTLET BOX	STANDARD PLATE NO. TRAF-3360-R1
	APPROVED: DRP	DATE: 11/18/13		

4 C9.41 ATTACHMENT - ST. LIGHT RECESSED OUTLET BOX NOT TO SCALE

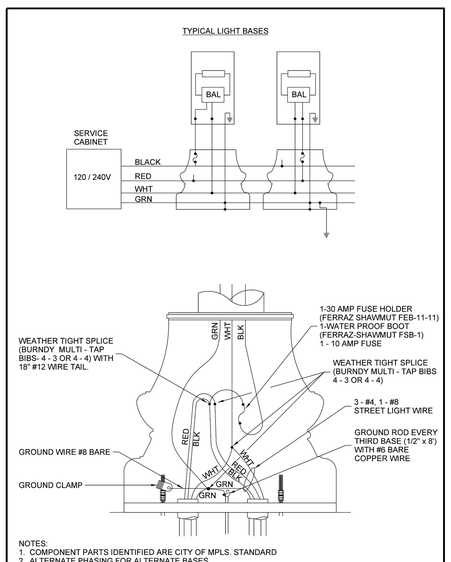

NOTES:
1. COMPONENT PARTS IDENTIFIED ARE CITY OF MPLS. STANDARD
2. ALTERNATE PHASING FOR ALTERNATE BASES.

NO SCALE

MINNEAPOLIS DEPARTMENT OF PUBLIC WORKS	DRAWN: CLK	DATE: 10/18/13	WIRING - ST. LIGHT STANDARD LOW LEVEL120V	STANDARD PLATE NO. TRAF-3627-R2
	APPROVED: DRP	DATE: 10/18/13		

5 C9.41 WIRING - ST. LIGHT STANDARD LOW LEVEL 120V NOT TO SCALE

PLOT DATE: 1/15/2015 3:26:54 PM

HKS

OWNER
MINNESOTA SPORTS FACILITIES AUTHORITY
900 SOUTH 5th STREET, MINNEAPOLIS, MN 55415

OWNER
MINNESOTA VIKINGS FOOTBALL, LLC
9500 VIKING DR., EDEN PRAIRIE, MN 55344

ARCHITECT
HKS, INC.
350 N. ST. PAUL ST., SUITE 100, DALLAS, TX 75201

CIVIL ENGINEER
EVS, INC.
10025 VALLEY VIEW, SUITE 140, EDEN PRAIRIE, MN 55344

LANDSCAPE ARCHITECT
OSLUND AND ASSOCIATES
115 WASHINGTON AVE. N., MINNEAPOLIS, MN 55401

STRUCTURAL ENGINEER
SEH INC.
10901 RED CIRCLE DR, STE 300 MINNETONKA, MN 55343

ELECTRICAL ENGINEER
SEH INC.
10901 RED CIRCLE DR, STE 300 MINNETONKA, MN 55343

AUDIO VISUAL CONSULTANTS
WJHW
4801 SPRING VALLEY RD., DALLAS, TX 75244

WAYFINDING
SELBERT PERKINS DESIGN
432 CULVER BLVD., PLAYA DEL REY, CA 90293

CIVIL ENGINEERING SUBCONSULTANT
HZ UNITED, LLC
3025 HARBOR LANE, SUITE 121, PLYMOUTH, MN 55447

Minnesota MULTI PURPOSE STADIUM

CERTIFICATION
I hereby certify that the plan, specification, or report was prepared by me or under my direct supervision and that I am a duly Licensed Professional Engineer under the laws of the State of Minnesota.
Name: Paul J Zager
Reg. No.: 41642
Date: 2/01/2016
Signature:

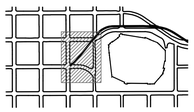

REVISION

NO.	DESCRIPTION	DATE

HKS PROJECT NUMBER
16246.000

DATE
FEBRUARY 01, 2016

ISSUE
CCD-347 - CD SET

SHEET TITLE
PLAZA LIGHTING DETAILS

SHEET NO.
C9.41

© 2013 HKS, INC.

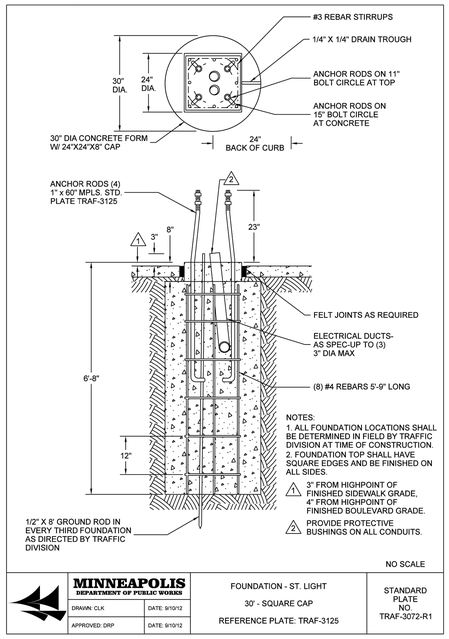

NOTES:
1. ALL FOUNDATION LOCATIONS SHALL BE DETERMINED IN FIELD BY TRAFFIC DIVISION AT TIME OF CONSTRUCTION.
2. FOUNDATION TOP SHALL HAVE SQUARE EDGES AND BE FINISHED ON ALL SIDES.
1. 3" FROM HIGHPOINT OF FINISHED SIDEWALK GRADE, 4" FROM HIGHPOINT OF FINISHED BOULEVARD GRADE.
2. PROVIDE PROTECTIVE BUSHINGS ON ALL CONDUITS.

NO SCALE

MINNEAPOLIS DEPARTMENT OF PUBLIC WORKS		FOUNDATION - ST. LIGHT 30' - SQUARE CAP REFERENCE PLATE: TRAF-3125	STANDARD PLATE NO. TRAF-3072-R1
DRAWN: CLK	DATE: 9/10/12		
APPROVED: DRP	DATE: 9/10/12		

1 C9.42 FOUNDATION - ST. LIGHT 30' - SQUARE CAP NOT TO SCALE

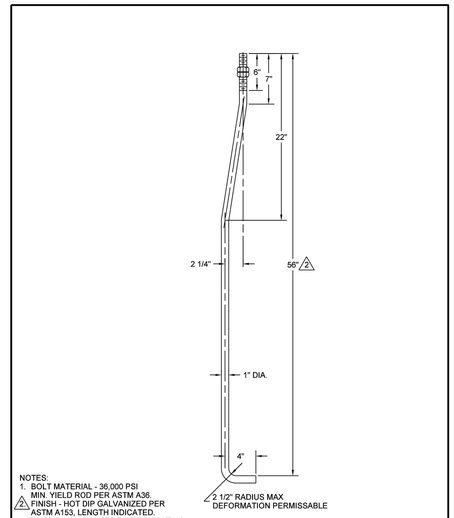

NOTES:
1. BOLT MATERIAL - 36,000 PSI MIN. YIELD ROD PER ASTM A36.
2. FINISH - HOT DIP GALVANIZED PER ASTM A153, LENGTH INDICATED. NUTS SHALL RUN FREE AFTER PLATING.
3. THREAD SHALL BE CLASS 2A PER AMERICAN STD. B 1.1 AFTER GALVANIZING.
4. ALL BOLTS CUT THREAD.
5. 2 GALVANIZED HEAVY HEX NUTS PER ASTM A194 GR. 2H, ASSEMBLED AFTER ROD PLATING.

NO SCALE

MINNEAPOLIS DEPARTMENT OF PUBLIC WORKS		ANCHOR ROD - ST. LIGHT 1" X 56"	STANDARD PLATE NO. TRAF-3125
DRAWN: LPK	DATE: 1/1/11		
APPROVED: DRP	DATE: 1/1/11		

2 C9.42 ANCHOR ROD - ST. LIGHT 1" X 56" NOT TO SCALE

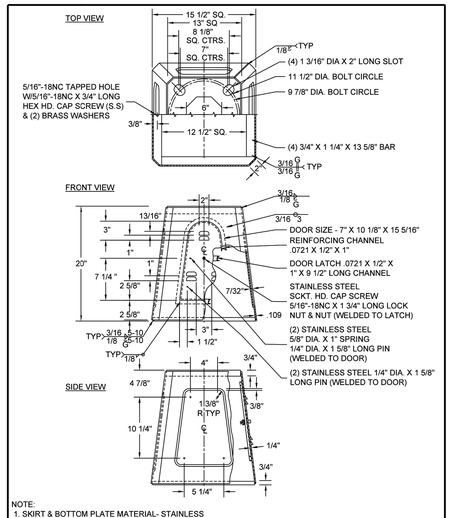

NOTE:
1. SKIRT & BOTTOM PLATE MATERIAL- STAINLESS STEEL (TYPE 201) 60,000 PSI MIN. YIELD AFTER FABRICATION. TOP PLATE MATERIAL- LOW CARBON STEEL 36,000 PSI MIN. YIELD.
2. FINISH-EPOXY PRIMER
3. FINISH-UPS BROWN THERMO-SET ACRLYIC

NO SCALE

MINNEAPOLIS DEPARTMENT OF PUBLIC WORKS		BASE - ST. LIGHT TRANSFORMER 30'	STANDARD PLATE NO. TRAF-3160
DRAWN: LPK	DATE: 1/1/11		
APPROVED: DRP	DATE: 1/1/11		

3 C9.42 BASE - ST. LIGHT TRANSFORMER 30' NOT TO SCALE

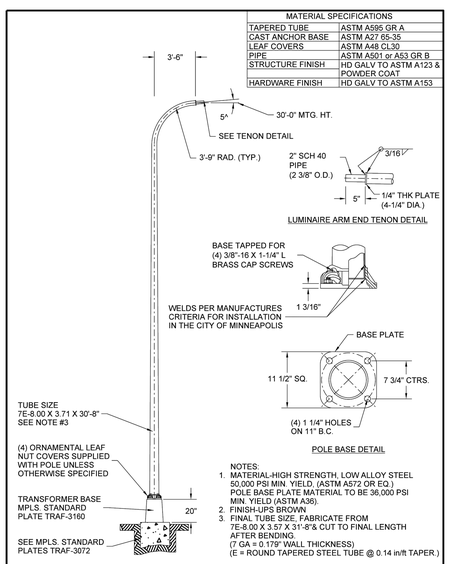

MATERIAL SPECIFICATIONS	
TAPERED TUBE	ASTM A595 GR A
CAST ANCHOR BASE	ASTM A27 65-35
LEAF COVERS	ASTM A48 CL30
PIPE	ASTM A501 or A53 GR B
STRUCTURE FINISH	HD GALV TO ASTM A123 & POWDER COAT
HARDWARE FINISH	HD GALV TO ASTM A153

NOTES:
1. MATERIAL-HIGH STRENGTH, LOW ALLOY STEEL 50,000 PSI MIN. YIELD. (ASTM A572 OR EQ.) POLE BASE PLATE MATERIAL TO BE 36,000 PSI MIN. YIELD (ASTM A36).
2. FINISH-UPS BROWN
3. FINAL TUBE SIZE. FABRICATE FROM 7E-8.00 X 3.57 X 31'-8"& CUT TO FINAL LENGTH AFTER BENDING. (7 GA = 0.179" WALL THICKNESS) (E = ROUND TAPERED STEEL TUBE @ 0.14 in/ft TAPER.)

NO SCALE

Minneapolis Public Works		STANDARD - ST. LIGHT 3M-30' GALVANIZED STEEL REFERENCE PLATES: TRAF-3072, TRAF-3160	STANDARD PLATE NO. TRAF-3206-R3
CLK JGP	DATE: 4/27/15		
APP: DRP	DATE: 4/27/15		

4 C9.42 STANDARD - ST. LIGHT 3M-30' GALVANIZED STEEL NOT TO SCALE

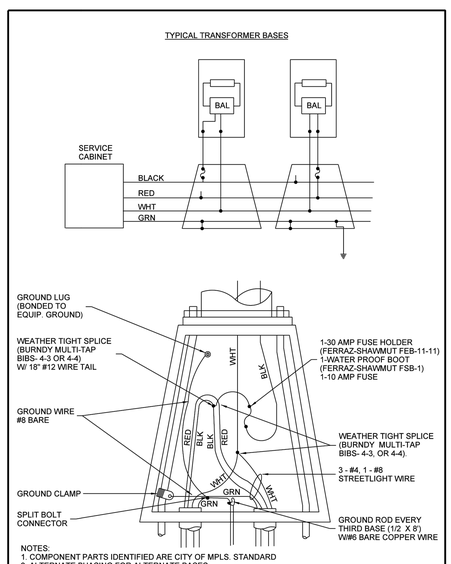

NOTES:
1. COMPONENT PARTS IDENTIFIED ARE CITY OF MPLS. STANDARD
2. ALTERNATE PHASING FOR ALTERNATE BASES.

NO SCALE

MINNEAPOLIS DEPARTMENT OF PUBLIC WORKS		WIRING - ST. LIGHT STANDARD HIGH LEVEL 120V	STANDARD PLATE NO. TRAF-3623-R1
DRAWN: CLK	DATE: 11/17/11		
APPROVED: DRP	DATE: 11/17/11		

5 C9.42 WIRING - ST. LIGHT STANDARD HIGH LEVEL 120V NOT TO SCALE

PLOT DATE: 1/15/2015 3:26:54 PM

HKS

OWNER
MINNESOTA SPORTS FACILITIES AUTHORITY
900 SOUTH 5th STREET, MINNEAPOLIS, MN 55415

OWNER
MINNESOTA VIKINGS FOOTBALL, LLC
9500 VIKING DR., EDEN PRAIRIE, MN 55344

ARCHITECT
HKS, INC.
350 N. ST. PAUL ST., SUITE 100, DALLAS, TX 75201

CIVIL ENGINEER
EVS, INC.
10025 VALLEY VIEW, SUITE 140, EDEN PRAIRIE, MN 55344

LANDSCAPE ARCHITECT
OSLUND AND ASSOCIATES
115 WASHINGTON AVE. N., MINNEAPOLIS, MN 55401

STRUCTURAL ENGINEER
SEH INC.
10901 RED CIRCLE DR, STE 300 MINNETONKA, MN 55343

ELECTRICAL ENGINEER
SEH INC.
10901 RED CIRCLE DR, STE 300 MINNETONKA, MN 55343

AUDIO VISUAL CONSULTANTS
WJHW
4801 SPRING VALLEY RD., DALLAS, TX 75244

WAYFINDING
SELBERT PERKINS DESIGN
432 CULVER BLVD., PLAYA DEL REY, CA 90293

CIVIL ENGINEERING SUBCONSULTANT
HZ UNITED, LLC
3025 HARBOR LANE, SUITE 121, PLYMOUTH, MN 55447

Minnesota MULTI-PURPOSE STADIUM

CERTIFICATION
I hereby certify that the plan, specification, or report was prepared by me or under my direct supervision and that I am a duly Licensed Professional Engineer under the laws of the State of Minnesota.
Name: Paul J Zager
Reg. No.: 41642
Date: 2/01/2016
Signature:

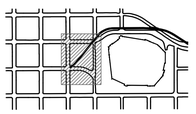

REVISION

NO.	DESCRIPTION	DATE

HKS PROJECT NUMBER
16246.000

DATE
FEBRUARY 01, 2016

ISSUE
CCD-347 - CD SET

SHEET TITLE
PLAZA LIGHTING DETAILS

SHEET NO.
C9.42

© 2013 HKS, INC.

NOTES:
1. LIGHTING UNITS ON STADIUM SIDE OF CHICAGO AVE. ARE INSTALLED BY A SEPARATE CONTRACT.
2. ALL NEW PROPOSED LIGHTING UNITS SHALL BE LED CITY OF MINNEAPOLIS APPROVED UNITS.
3. SPLICE NEW AND EXISTING CONDUITS TOGETHER ALONG PROJECT PERIMETER
4. SEE ADDITIONAL NOTES ON SHEET C2.42.
5. ALL PROPOSED CONDUIT SHALL BE ASSUMED TO BE 2" NMC 4-1/C#4 UNLESS OTHERWISE NOTED.
6. PHOTOMETRIC RESULTS ARE BASED ON A MODEL. ACTUAL RESULTS MAY DIFFER IN THE FIELD.
7. CONTRACTOR MAY REUSE EXISTING CONDUIT CROSSINGS WHERE APPROPRIATE AS APPROVED BY THE ENGINEER

EXISTING HIGH-LEVEL LIGHTING UNIT

EXISTING LOW-LEVEL LIGHTING UNIT

PROPOSED HIGH-LEVEL LIGHTING UNIT

PROPOSED LOW-LEVEL LIGHTING UNIT

SERVICE CABINET

HANDHOLE

2" NMC CONDUIT

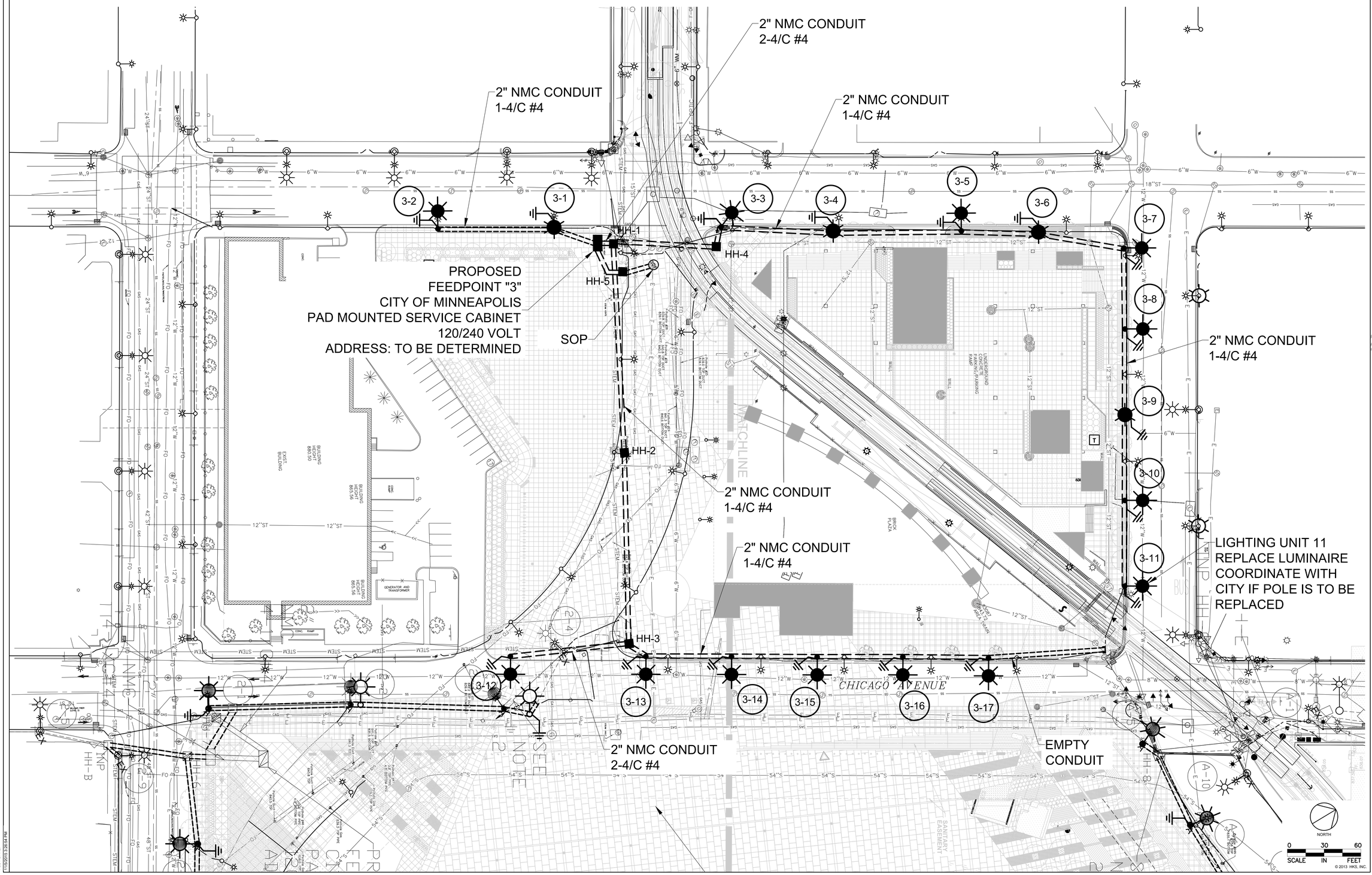

© 2013 HKS, INC.

HKS

OWNER
MINNESOTA SPORTS FACILITIES AUTHORITY
900 SOUTH 5th STREET, MINNEAPOLIS, MN 55415

OWNER
MINNESOTA VIKINGS FOOTBALL, LLC
9500 VIKING DR., EDEN PRAIRIE, MN 55344

ARCHITECT
HKS, INC.
350 N. ST. PAUL ST., SUITE 100, DALLAS, TX 75201

CIVIL ENGINEER
EVS, INC.
10025 VALLEY VIEW, SUITE 140, EDEN PRAIRIE, MN 55344

LANDSCAPE ARCHITECT
OSLUND AND ASSOCIATES
115 WASHINGTON AVE. N., MINNEAPOLIS, MN 55401

STRUCTURAL ENGINEER
SEH INC.
10901 RED CIRCLE DR, STE 300 MINNETONKA, MN 55343

ELECTRICAL ENGINEER
SEH INC.
10901 RED CIRCLE DR, STE 300 MINNETONKA, MN 55343

AUDIO VISUAL CONSULTANTS
WJHW
4801 SPRING VALLEY RD., DALLAS, TX 75244

WAYFINDING
SELBERT PERKINS DESIGN
432 CULVER BLVD., PLAYA DEL REY, CA 90293

CIVIL ENGINEERING SUBCONSULTANT
HZ UNITED, LLC
3025 HARBOR LANE, SUITE 121, PLYMOUTH, MN 55447

MINNESOTA MULTI PURPOSE STADIUM

CERTIFICATION

I hereby certify that the plan, specification, or report was prepared by me or under my direct supervision and that I am a duly Licensed Professional Engineer under the laws of the State of Minnesota.

Name: *Paul J Zager*
Reg. No.: *41662*
Date: *2/01/2016*
Signature:

REVISION

NO.	DESCRIPTION	DATE

HKS PROJECT NUMBER
16246.000

DATE
FEBRUARY 01, 2016

ISSUE
CCD-347 - CD SET

SHEET TITLE
PLAZA LIGHTING

SHEET NO.
C9.43

PLOT DATE:
1/15/2015 3:26:54 PM